Disconnect blocks with U-foot, type *WK*

selos

When selecting G fuse inserts, make sure that the specified maximum power is not exceeded.[1)]
The current is determined by the inserted fuse. [1)] The voltage range is determined by the built-in LED display.[2)]
Depending on the application and the installation method, the circumstances for increased temperature must be checked in the closed fuse holders.
Higher ambient temperatures are an additional load for the fuse inserts. Therefore, the reduction of the rated current must be considered accordingly in these applications.

Indicator (24 V): Lamp color: red
Power consumption: 10.3 mA

Indicator (220 V): Lamp color: red
Current input: 0.3 mA

[1)] Maximum power loss at 23 °C ambient temperature (according to DIN EN 60947-7-3)

Type	Rated voltage	Overload protection		Exclusive short-circuit protection	
		Single arrangement	Group arrangement	Single arrangement	Group arrangement
THSI 5x20	250 V	1.6 W	1.6 W	4.0 W	2.5 W
THSI 6.3x32	500 V	2.5 W	1.6 W	4.0 W	4.0 W

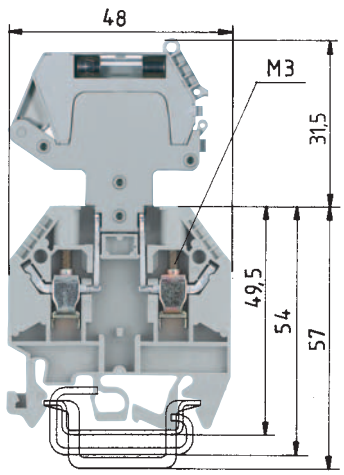

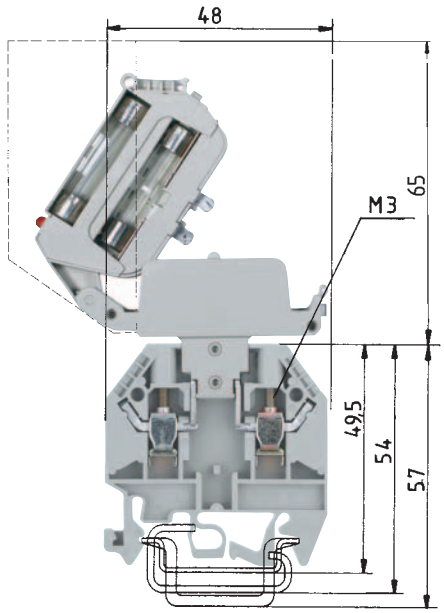

	WK 4 TKG... mit THSi 5x20		WK 4 TKG... mit THSi 6,3x32	
EN 60 947-7-1/DIN VDE 0611 Teil 1	fine-stranded solid	V	fine-stranded solid	V
EN 60 127-6/DIN VDE 0820 T6	0.5 – 4 mm² 0.5 – 6 mm²	800 V/8 kV/3[2)]	0.5 – 4 mm² 0.5 – 6 mm²	800 V/8 kV/3[2)]
UL ratings field/factory wiring	No. 22-10 AWG	300 V[2)]	No. 22-10 AWG	300 V[2)]
CSA ratings	No. 20-10 AWG	250 V[2)]	No. 20-10 AWG	250 V[2)]
Width Wire strip length	6 mm	9 mm	6 mm	9 mm
Approvals				

		Type	Part No.	Std. Pack	Type	Part No.	Std. Pack
Disconnect base block	gray	WK 4 TKG/U	57.504.4055.0	100	WK 4 TKG/U	57.504.4055.0	100
Fuse disconnect lever		THSI 5x20	Z1.298.1053.0	10	THSI 6,3x32	Z1.298.1653.0	10
Fuse disconnect lever with LED 12 – 24 V[2)]		THSI 5x20 LED24	Z1.298.1153.0	10	THSI 6,3x32 LED24	Z1.298.1753.0	10
Fuse disconnect lever with LED 24 – 60 V[2)]		THSI 5x20 LED60	Z1.298.1253.0	10	THSI 6,3x32 LED60	Z1.298.1853.0	10
Fuse disconnect lever with GL 110 – 250 V[2)]		THSI 5x20 GL250	Z1.298.1353.0	10	THSI 6,3x32 GL250	Z1.298.1953.0	10
Knife edge disconnect block	gray						
	blue						
– with 2 test bolts	gray						
Invertible plug disconnect block m. Inver. plug w/o test bolt	C.: gray						
– with test bolts left and right	gray						
Feed-through block	gray						
Accessories							
1. Mounting rail TS 35, DIN rail, 7.5 mm high	L = 2 m	35 x 27 x 7,5 EN 60715	98.300.0000.0	1	35 x 27 x 7,5 EN 60715	98.300.0000.0	1
Mounting rail TS 35, DIN rail 15 mm high	L = 2 m	35 x 24 x 15 EN 60715	98.360.0000.0	1	35 x 24 x 15 EN 60715	98.360.0000.0	1
Mounting rail TS 32, G rail	L = 2 m	9006 EN 60715 G-32	98.190.0000.0	1	9006 EN 60715 G-32	98.190.0000.0	1
2. End clamp with U-foot	10 mm wide	WE 2/U	Z5.523.5653.0	100	WE 2/U	Z5.523.5653.0	100
End clamp TS 35, with screw	8 mm wide	9708/2 S 35	Z5.522.8553.0	100	9708/2 S 35	Z5.522.8553.0	100
End clamp TS 32, with screw	7.5 mm wide	9708	Z5.522.7053.0	100	9708	Z5.522.7053.0	100
3. End plate, 1.5 mm thick	gray	AP 4 TK	07.311.6155.0	10	AP 4 TK	07.311.6155.0	10
	blue						
4. Partition, 1.5 mm thick	gray	TW 4 TK	07.311.8155.0	10	TW 4 TK	07.311.8155.0	10
	blue						
5. Jumper comb	insulated 2 pole	IVB 1 WK 4..-2	Z7.255.4227.0	10	IVB 1 WK 4..-2	Z7.255.4227.0	10
	to 6 pole	IVB 1 WK 4..-6	Z7.255.4627.0	10	IVB 1 WK 4..-6	Z7.255.4627.0	10
6. Cover f. cross conn. with marking facility							
7. Snap-in partition plate with marking facility							
For marking systems see pages 230-237							

Subject to change without further notice

Disconnect blocks with U-foot, type *WK*

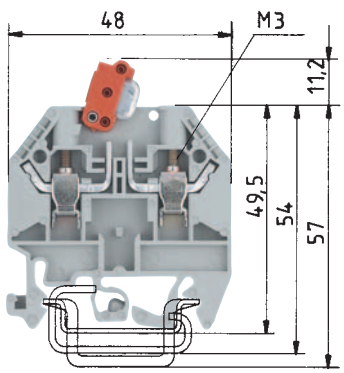

The disconnecting knife in these WK versions swings in and out on a pivot point. The distinctive color of the disconnecting lever signals the open state. The terminals can be connected with the lever open or closed. Designs with a different number and arrangement of test sockets permit safe measurements using the test plug.

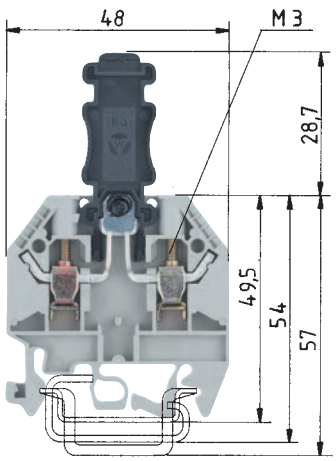

The plug in disconnect terminal has the same profile as the modular terminal WK4. The isolating connector is detachable and can be fitted as a dummy plug. This signals the open state. Designs with different numbers of test sockets permit safe measurements using the test plug.

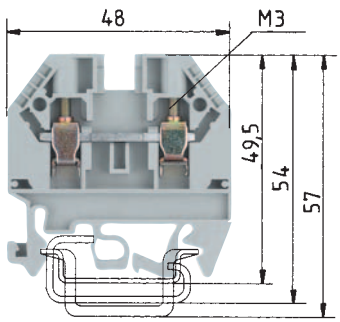

Same dimensions as types WK 4 TKG/U and WK 4/TKM/U

WK 4/TKM

fine-stranded	solid	V	A
0.5 – 4 mm²	0.5 – 6 mm²	800 V/8 kV/3*)	20
No. 22-10 AWG		600 V	20
No. 22-10 AWG		600 V*)	20
6 mm			9 mm

Type	Part No.	Std. Pack
WK 4/TKM/U	57.504.2055.0	100
WK 4/TKM/U BLAU	57.504.2055.6	100
WK 4/TKM/P3/U	57.504.2355.0	100
35 x 27 x 7,5 EN 60715	98.300.0000.0	1
35 x 24 x 15 EN 60715	98.360.0000.0	1
9006 EN 60715 G-32	98.190.0000.0	1
WE 2/U	Z5.523.5653.0	100
9708/2 S 35	Z5.522.8553.0	100
9708	Z5.522.7053.0	100
AP 4 TK	07.311.6155.0	10
AP 4 TK BLAU	07.311.6155.6	10
TW 4 TK	07.311.8155.0	10
TW 4 TK BLAU	07.311.8155.6	10
IVB 1 WK 4..-2	Z7.255.4227.0	10
IVB 1 WK 4..-6	Z7.255.4627.0	10

*) **Version with test bolt:** CSA: 300 V
EN 60 947-7-1/DIN VDE 0611 T1 – 690 V/6 kV/3
Test bolt can be loaded with 1 A

WK 4 TKG-TRST/U

fine-stranded	solid	V	A
0.5 – 4 mm²	0.5 – 6 mm²	800 V/8 kV/3*)	20
No. 22-10 AWG		300 V	10
No. 22-10 AWG		600 V*)	20
6 mm			9 mm

Type	Part No.	Std. Pack
WK 4 TKG-TRST/U	57.504.4555.0	100
WK 4 TKG-TRST P3/U	57.504.4855.0	100
35 x 27 x 7,5 EN 60715	98.300.0000.0	1
35 x 24 x 15 EN 60715	98.360.0000.0	1
9006 EN 60715 G-32	98.190.0000.0	1
WE 2/U	Z5.523.5653.0	100
9708/2 S 35	Z5.522.8553.0	100
9708	Z5.522.7053.0	100
AP 4 TK	07.311.6155.0	10
TW 4 TK	07.311.8155.0	10
IVB 1 WK 4..-2	Z7.255.4227.0	10
IVB 1 WK 4..-6	Z7.255.4627.0	10

*) **Version with test bolt:** CSA: 300 V
EN 60 947-7-1/DIN VDE 0611 T1 – 690 V/6 kV/3
Test bolt can be loaded with 1 A

WK 4 TKS D/U

fine-stranded	solid	V	A
0.5 – 4 mm²	0.5 – 6 mm²	800 V/8 kV/3	32
No. 22-10 AWG		300 V	25
No. 20-10 AWG		600 V	20
6 mm			9 mm

Type	Part No.	Std. Pack
WK 4 TKS D/U	57.504.4455.0	100
35 x 27 x 7,5 EN 60715	98.300.0000.0	1
35 x 24 x 15 EN 60715	98.360.0000.0	1
9006 EN 60715 G-32	98.190.0000.0	1
WE 2/U	Z5.523.5653.0	100
9708/2 S 35	Z5.522.8553.0	100
9708	Z5.522.7053.0	100
AP 4 TK	07.311.6155.0	10
TW 4 TK	07.311.8155.0	10
IVB 1 WK 4..-2	Z7.255.4227.0	10
IVB 1 WK 4..-6	Z7.255.4627.0	10
AD VB 4 GELB	04.326.2153.8	10
TS 4 GELB	07.311.2153.8	10